Transactions of KSAE, Vol. 29, No. 3, pp.251-255 (March, 2021)

Check for updates

Copyright © 2021 KSAE / 184-06
pISSN 1225-6382 / eISSN 2234-0149
DOI http://dx.doi.org/10.7467/KSAE.2021.29.3.251

〈Technical Paper〉

Design Optimization of Space Frame for Small Volume Lightweight Roadster

Sung yong Ha*

Department of Automotive Systems Engineering, Joongbu University, Gyeonggi 10279, Korea
(Received 16 November 2020 / Revised 26 November 2020 / Accepted 3 December 2020)

Abstract：In general, low-volume cars for niche markets, producing less than 5,000 units per year, have had a steady market share mainly in Europe and North America since the 1960s. Low-volume production vehicles include not only high-performance vehicles with a small market size, but also vehicles for special purposes. For small-scale production vehicles to remain competitive in the market, a reasonable development cost must be invested in accordance with production volume. Moreover, a space frame structure using steel tubes, which has been widely used for a long time, best meets this purpose. The space frame structure has certain disadvantages in terms of absorption of collision energy and free packages. However, it is distinguished from the monocoque body generally used in mass-produced vehicles because it is inexpensive to develop, and can easily implement the functions preferred by small-scale manufacturers. In this paper, the CAE procedure is utilized to determine the minimum frame strength required for low-production sports cars and the viability of the methodology to meet legal safety requirements because of its extruded aluminum bumper system.

Key words：Small volume lightweight roadster, Space frame structure, Vehicle body frame, Mass-produced vehicles, Low-volume production vehicles, Small-scale production vehicle

1. Introduction

Tubular space frame is widely used among low-volume car makers because of its simple structure and low investment cost. However, it has disadvantages in response to collision safety due to shape constraints.[1)] Compared to steel materials, the strength of aluminum materials does not significantly decrease after the yield point and sometimes even increase depending on the alloy type. Thus, aluminum cars exhibit excellent energy absorption performance when exposed to collision accidents. Furthermore, because profiles of various cross sections can be produced through the extrusion process, a high-performance collision-absorbing structure can be secured at a low cost, making it an efficient alternative for low-volume car makers.

This study determines the demand level of basic body strength by applying CR340, which is generally used in vehicles, and the high-tension steel DP780 to a space frame designed for a two-seat roadster. In addition, this study investigates the impact energy absorption characteristics according to the types of shock-absorbing members by applying various shapes of shock-absorbing cross sections to the shock-absorbing structure using AL6061T6. It is an aluminum alloy that can be easily procured from the market.

2. Car Model and Collision Conditions

2.1 Car Model

The car model used in this study is a conceptual design model for a small-quantity production of two-seat high-performance electric roadster with a tubular space frame structure typically used in small-quantity vehicles. For the frame material, CR340, a general steel grade for vehicles, and DP780, a high-tension steel grade, were compared. For the bumper system, AL6061T6 was used, which is easy for material supply and extrusion molding.

The total vehicle weight is 1016.2 kg, and the weights of each system are listed in Table 1.

*Corresponding author, E-mail: hsy1396@joongbu.ac.kr
*This is an Open-Access article distributed under the terms of the Creative Commons Attribution Non-Commercial License(http://creativecommons.org/licenses/by-nc/3.0) which permits unrestricted non-commercial use, distribution, and reproduction in any medium provided the original work is properly cited.

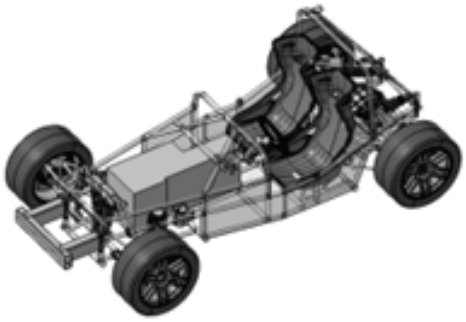

Fig. 1 Lightweight roadster for small quantity

Table 1 Vehicle weight configuration

Part	Weight (kg)
Frame	127
Motor and gear box	81
Drive shaft	30
Seat	20
Brake system	88
Battery	350
Steering system	11
Wheel and tire	80
Damper and spring	24
Bumper	5.2
ETC.	50
Driver and passenger	150
Total	1016.2

2.2 Collision Conditions

The collision safety tests of commercial vehicles can be largely divided into laws and evaluation. According to a recent trend, regional evaluation standards represented by the New Car Assessment Program(NCAP) have a greater influence in the market than laws. Both the NCAP and the laws evaluate the collision safety based on the injury level of each body part resulting from collision using a dummy. However, most small quantity manufacturers experience difficulty in performing such an expensive crash test process.

According to the domestic safety regulation, Article 102-3(Safety of head-on collision on fixed wall) of the "Regulation on the Performance and Standards of Automobiles and Auto Parts", prescribes that in the case of a general passenger car crashing head-on to a fixed wall at a speed of 50 km/h, the Hybrid Ⅲ 50th percentile male dummy must be used for the driver's seat. The driver's seat dummy injury conditions are specified as follows: HIC36 is 1,000 or less, the head composite acceleration does not exceed 80 G, the chest compression displacement is 42 mm or less, the chest compression speed is 1 m/s or less, the thigh compression load is 9.07 kN or less, the neck tensile load is 3.3 kN or below, the neck shear load is 3.1 kN or less, and the bending moment is 57 Nm or less. Among them, the HIC value is calculated by using the following equation:

$$HIC=\max_{t_1,t_2}\left\{\left[\frac{1}{t_2-t_1}\int_{t_1}^{t_2}a(t)dt\right]^{2.5}(t_2-t_1)\right\} \quad (1)$$

This study used the speed of 56 km/h to apply a harsher condition.

2.3 Collision Analysis Model

For the analysis model, 495,546 shell elements and 480,236 solid elements were used. The element size was set to 5 mm. Parts, such as battery, motor, and gearbox, were treated as rigid bodies, assuming that they are not deformed by collision.

To measure the body acceleration, node 312450 of the seat lower frame, which is expected to have the smallest displacement in a head-on collision, was set as the acceleration measurement point.

The analysis modeling was performed by using HyperWorks, and the collision analysis was performed by using LS-DYNA version 971.

3. Applied Materials

3.1 Mainframe Material

The tubular space frame structure has been used in most small-quantity vehicles because the materials are easy to

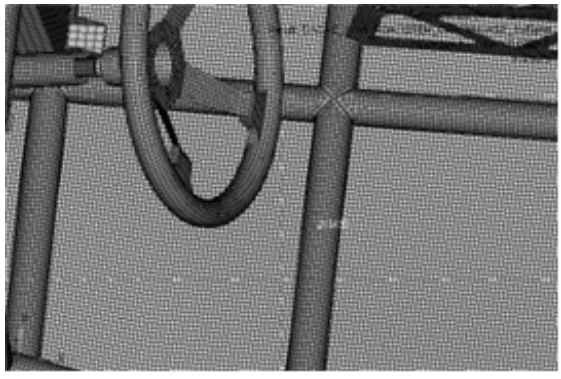

Fig. 2 Body speed measurement point

Table 2 Materials for main frame

Material name	TYS (MPa)	UTS (MPa)	EL (%)
CR430	195	340	32
DP780	500	780	13

procure and the investment cost for the production is low. Although the CFRP monocoque has been commonly used mainly for high-end high-performance vehicles, the tubular space frame structure can still be considered as the most easily accessible body structure. An appropriate collision energy absorption structure of the body is required in order to secure basic collision safety in the modern automobile market where it is essential to secure collision safety. However, it is not easy to apply an energy absorption structure due to the structural characteristics of the space frame.

In North America and Europe, where small quantity vehicles are actively produced, tubes made of chrome molybdenum alloy are widely used in vehicles and aircrafts.[2] In South Korea, however, the manufacturers completely depend on imports because it is difficult to procure these materials. The dual phase steel for vehicles is being actively used in South Korea, and it is also used in tubes. Since this is believed to be capable of replacing existing materials, such as the CrMo 4130, this was applied to the car model in this study.

3.2 Crash Box and Bumper Beam

Crash box is a crucial safety member that initially absorbs the collision energy in a head-on collision. In general, both steel and aluminum are being used. Due to the excellent collision energy absorption property of aluminum, its applications have increased sharply in North America since early 2000s. It was also selected as an aluminum application

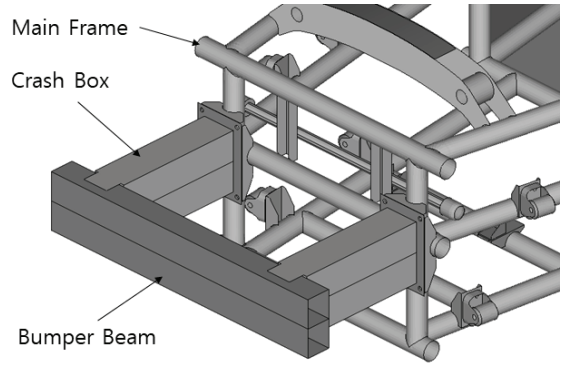

Fig. 3 Crash box section

Table 3 AL6061T6 material property

Material name	TYS (MPa)	UTS (MPa)	EL (%)
AL6061T6	195	340	32

area that grows most rapidly.

This study conducted the collision analysis by configuring a bumper system of the structure in Fig. 3.

The AL6061T6 material is being applied to a variety of fields as soft alloy for heat treatment. It is suitable for bumper systems produced in small quantities because it has good extrusion characteristics, and it can form various extrusion sections. Thus, it is suitable for a small quantity bumper system.

3.3 Section Shapes of the Crash Box

This study examined the collision absorption characteristics of the cross section for five types of crash box. Since the strain strength increases with the number of strengthening ribs, it was expected that characteristics will appear according to the shape characteristics regarding the collision energy absorption characteristics. The five cross section shapes in Fig. 4 can be easily produced by using the extrusion process. In addition, the shape can be optimized by using various methods depending on the test results.

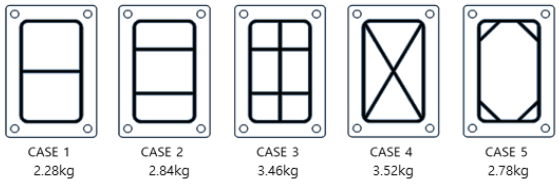

Fig. 4 Crash box section and part weight

4. Analysis Result

4.1 Effects of the Main Frame Material

CR340 and DP780 were applied to the main frame, and the collision characteristics were examined by using a thickness of 2 mm for the crash box.

Fig. 5 shows the collision acceleration when CR340 and DP780 were applied as the main frame material using the same crash box. Fig. 6 shows the displacements of the bumper and main frame at 5 ms, which is considered as the starting point of collision. As can be seen in Fig. 4, when the strength of the main frame is insufficient, the crash box

cannot play the role of energy absorption appropriately.

The energy absorption section of the crash box is approximately 20 ms. However, if the strength of the main frame is insufficient as shown in Fig. 6(a), the deformation of the main frame occurs before the crash box. As a result, the crash box cannot act as an energy absorber. Fig. 6(b) is the case of applying DP780 to the mainframe, and it can be seen that the crash box performs energy absorption function as it is deformed appropriately until 20 ms.

This suggests that an appropriate strength of the main frame supports the normal functioning of the crash box. Since various materials that can replace CrMo-based alloys, such as DP780 and AutoBeam, have been developed, it will be a good choice to consider using them.

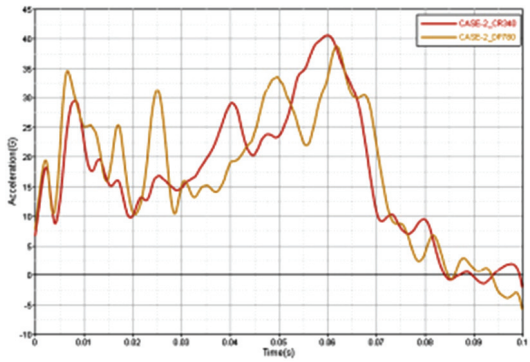

Fig. 5 Collision acceleration by mainframe material type

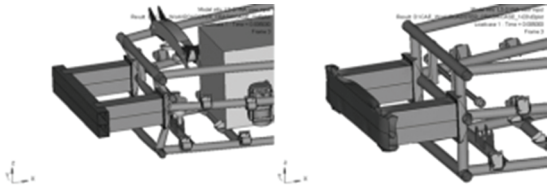

Fig. 6 (a) CR340 and (b) DP780 frame displacement at 5 ms

(a)

(b)

Fig. 7 Bumper beam behavior up to 20 ms

4.2 Effect of the Cross Section Shape of the Crash Box

Collision acceleration was compared by using the cross section shape of the crash box. As mentioned above, the collision safety law determines the satisfaction of the law based on the injury values of the collision dummy, such as HIC and compression load on the thigh. However, this requires many real vehicle tests or analysis using expensive precision dummies, and it will be difficult for small quantity manufacturers to perform them efficiently. Moreover, the body injury values greatly depend on additional safety devices, such as seat belt and airbag, so these parts were excluded. Based on the body acceleration of 40 G, which is GM's development guideline, the cross-sectional shape of the crash box that can secure it was selected under the assumption that the human injury value applied with a seat belt or air bag can be implemented at a level that satisfies the law.

Table 4 shows the maximum collision acceleration and occurrence time when each crash box section was applied. As can be seen from this, the sectional shape of the crash box has a significant effect on the collision energy absorption performance. In CASE 4, the maximum acceleration is the lowest at 31.5 G and the occurrence time of the maximum acceleration is 65 ms, which corresponds to the mid and later parts of collision. It can be seen that the

Table 4 Collision acceleration by crash box univariate type

	Peck G	Time (ms)
CASE 1	49.6	26.0
CASE 2	38.7	61.9
CASE 3	50.1	41.7
CASE 4	31.5	65.0
CASE 5	45.4	27.8

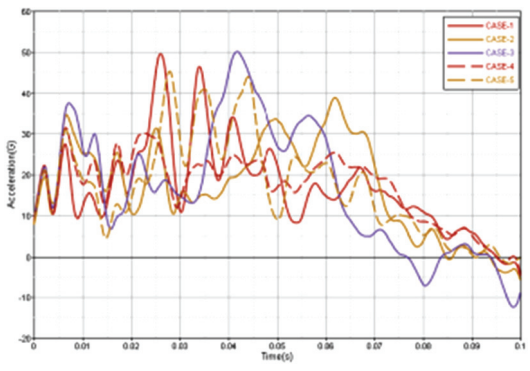

Fig. 8 Overall acceleration by CASE

shape of CASE 4 is the cross section that is the most suitable for the lightweight roadster used in this study.

5. Conclusions

The body strength by mainframe material type for the lightweight roadster with a tubular space frame and the collision performance of the five types of aluminum collision absorption members were examined via computer simulation. The analysis results showed that for the same thickness of 2 mm, the body acceleration of the CASE 4 model was the lowest. The collision performance classification according to the shape of each shock-absorbing member could be confirmed. However, in order to satisfy the HIC, chest acceleration, and femoral compressive load values generally required by law, it was assumed that the vehicle body acceleration must be less than 40 G. Hence, the correlation between them must be additionally verified through analysis using the dummy. Consequently, when verifying the correlation between the human injury value and the body acceleration of 40 G, a development procedure was established in order to easily satisfy the legal requirements through the development of a frame with an appropriate body acceleration. Furthermore, it is expected that this will significantly reduce the development costs for small-scale vehicle manufacturers.

Acknowledgement

This study was conducted with the support of the Ministry of Trade, Industry and Energy as part of the industrial technology infrastructure construction project (Project number: 2006996, Development of future electric vehicle parts in industrial crisis areas).

References

1) National Highway Traffic Safety Administration, Relationships between Vehicle Size and Fatality Risk in Model Year 1985-93 Passenger Cars and Light Trucks, NHTSA Technical Report, 1997.
2) A. Tovar, J. Chen and K. Nematollahi, Topology Design of Vehicle Structures for Crashworthiness Using Variable Design Time, M. S. Thesis, Purdue University, West Lafayette, 2017.